PJ-154BS
Projection Speaker 15W EN/ISO/BS

APPEARANCE AND DIMENSIONAL DIAGRAM

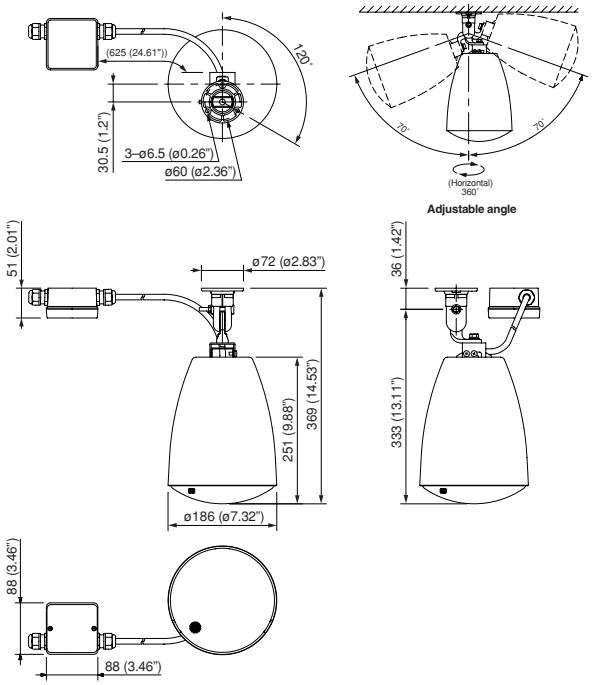

DESCRIPTION

The PJ-154BS is a 2-way speaker with an HIPS resin bass-reflex enclosure featuring a 12 cm (5") cone speaker and a balanced dome tweeter. Intended for ceiling and wall installation, it has an outstandingly stylish design that is inspired by the finest lighting fixtures, allowing it to be harmoniously installed with lighting equipment. It is ideally suited for such applications as BGM and announcements at airports, subway stations, art museums and shopping malls. The speaker is easy to repaint, extending the range of design needs it can meet. A supplied swivel bracket accessory allows for flexible speaker angle adjustment. PJ-154BS is driven on a high-impedance (100 V or 70 V) line. Input impedance is adjustable with a rotary switch on the upper side of the speaker. EN 54-24* and ISO 7240-24 certified, the PJ-154BS is authorized for use in conjunction with fire detection systems. It is also in compliance with BS 5839-8: 2008 14.8.

*EN 54-24: Loudspeaker for voice alarm systems for fire detection and fire alarm systems.

FEATURES

- Stylish and outstanding design inspired by the finest lighting fixtures
- Flexible speaker direction adjustment with accessory brackets
- Repaintable
- Input impedance easily changeable
- EN 54-24 and ISO 7240-24 certified (Certificate No.: 0359-CPD-0106)
- In compliance with BS 5839-8: 2008 14.8
- Ideally suited for voice alarm system applications

SPECIFICATIONS

Rated Noise Power:	15 W (100 V line), 7.5 W (70 V line)
Rated Impedance:	100 V line: 670 Ω (15 W), 1k Ω (10 W), 2k Ω (5 W), 70 V line: 670 Ω (7.5 W), 1k Ω (5 W), 2k Ω (2.5 W)
Sensitivity:	91 dB (1 W, 1 m) (500 – 5,000 Hz, pink noise) 87 dB (1 W, 1 m) (100 – 10,000 Hz, pink noise) 75 dB (1 W, 4 m) (100 – 10,000 Hz, pink noise)
Maximum Sound Pressure Level:	99 dB (15 W, 1 m) (100 – 10,000 Hz, pink noise) 87 dB (15 W, 4 m) (100 – 10,000 Hz, pink noise)
Frequency Response:	70 – 20,000 Hz
Coverage Angle:	Horizontal and Vertical: 360° (500 Hz), 170° (1,000 Hz), 90° (2,000 Hz), 70° (4,000 Hz)
Environmental Type:	A (indoor applications)
Speaker Component:	Low frequency: 12 cm (5") cone-type High frequency: 2.5 cm (1") balanced dome tweeter
Operating Temperature:	-10° C to +50° C (14° F to 122° F)
Speaker Mounting -Method:	Wall-mount and ceiling installation
Cable Gland:	Size: PG 13.5 One cable gland is factory-installed, For bridge connection, one cable gland can be added.*
Applicable Cable Size:	Outer diameter: ø 6.5 – 12.5 mm Conductor: Solid wire or 7-core wire 0.8 – 7 mm² (AWG 18 – AWG 9) for solid wire 0.8 – 4 mm² (AWG 18 – AWG 11) for 7-core wire
Cable Connection:	Screw terminal (steatite) × 2
Finish:	Enclosure: HIPS resin, off-white (RAL 9010 or equivalent colour) Grille: Surface-treated steel plate net, off-white (RAL 9010 or equivalent colour), paint
Dimensions:	ø 186 × 251 (H) mm (ø 7.32" × 9.88") (speaker only)
Weight:	2.1 kg (4.63 lb) (without swivel bracket)
Accessory:	Swivel bracket × 1, Swivel bracket mounting screw (tapping screw 4 × 16) × 3

* Part code for Cable gland: 525-52-011-70 Cable gland AVC PGB13.5-12 (GRY)

Wiring Diagram

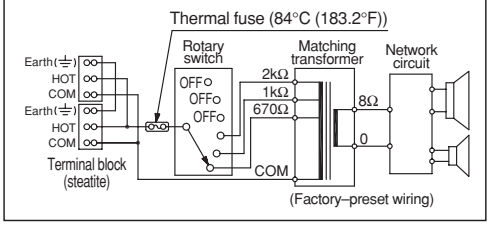

TOA

CHARACTERISTIC DIAGRAMS based on EN 54-24 measurement conditions (Pink noise, 1 W, 4 m)

Polar Response

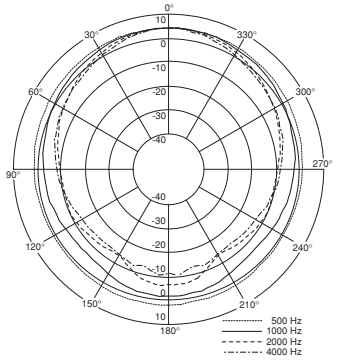

SPL vs. Frequency

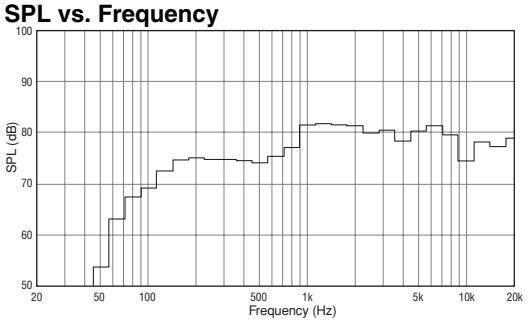

Beamwidth vs. Frequency

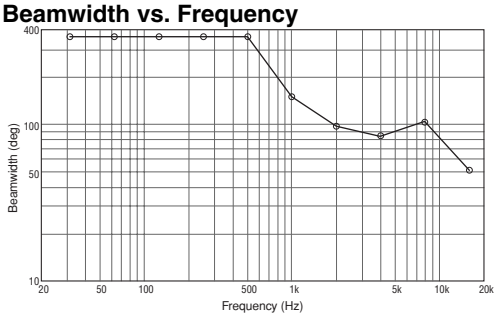

Directivity Factor vs. Frequency

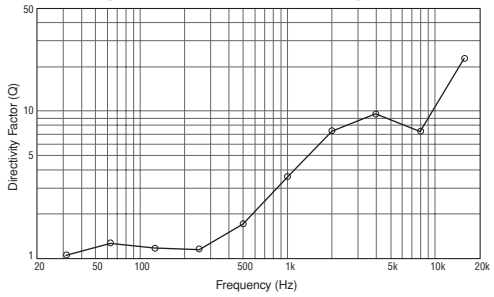

ARCHITECTURAL AND ENGINEERING SPECIFICATIONS

The speaker shall combine a bass-reflex 12 cm (5") cone type, with a balanced-dome tweeter, suitable for ceiling and wall mounting. It is also designed for use in voice evacuation systems. Input impedance shall be easily adjustable with rotary switch on the upper side of the speaker.
The speaker shall include a transformer having multiple taps (5 W, 10 W, 15 W at 100 V and 2.5 W, 5 W, 7.5 W at 70 V) adjustable. The output sound pressure level at a distance of 1m with a 1W input level applied shall be 91 dB SPL. The speaker shall have a frequency response of 70 – 20,000 Hz. The speaker shall have an ingress protection for indoor applications: IEC 60529 / EN 60529 drip-proof rating of IP21C. Fire Rated Cable can be connected to the speaker terminal box via PG13.5 (or 20 mm) cable gland. 2 × fire-resistant steatite screw terminal blocks in the speaker terminal box with shielded 4 core fire-resistant cable into the speaker allows secure cable connections and bridge wiring. A fire-resistant steatite terminal block with thermal fuse inside the speaker allows reduce the risk of speaker line failure and provide secure mounting feature with internal flame-resistant insulated cables.
The speaker enclosure shall be constructed of HIPS resin. The grille shall be constructed of surface-treated steel plate net. The speaker shall be available in off-white colour. The speaker unit shall have dimensions of ø 186 × 251 (H) mm (ø 7.32" × 9.88"), and a weight of 2.1 kg (4.63 lb).
The speaker shall be certified according to EN 54-24 with CPD Number 0359-CPD-0106, certified according to ISO 7240-24 and in compliance with the British Standard BS 5839-8.
The speaker shall be a TOA model PJ-154BS.

TOA Corporation
www.toa.jp

Specifications are subject to change without notice.
(1108) 833-52-426-1A u

Dovoz, distribuce a prodej v ČR:
AUDIO DIGITAL s.r.o.
www.audiodigital.cz