TOA

MOUNTING BRACKET

HY-1500HB

■DESCRIPTION

The HY-1500HB Mount Bracket is designed to mount speaker system to a wall or ceiling in a horizontal configuration. It allows the speaker orientation angle to be adjusted from 15° upward to 60° downward when mounted on a wall, and from 0° (horizontal) to 90° downward when mounted to a ceiling.

■SPECIFICATIONS

Finish	Steel plate, black, paint
Dimensions	485.4 (W) × 288 (H) × 90 (D) mm (19.11" × 11.34" × 3.54")
Weight	2.4 kg (5.29 lb)
Accessory	Bracket holder ···2, Bracket holder mounting screw ···4, Speaker mounting screw ···4, Nut for the optional bracket ···4, Washer for the optional bracket ···4
Option	Ceiling mount bracket: HY-C0801, Wall mount bracket: HY-W0801
Applicable Speaker (option)	HS-150B, HS-1500BT

■APPEARANCE

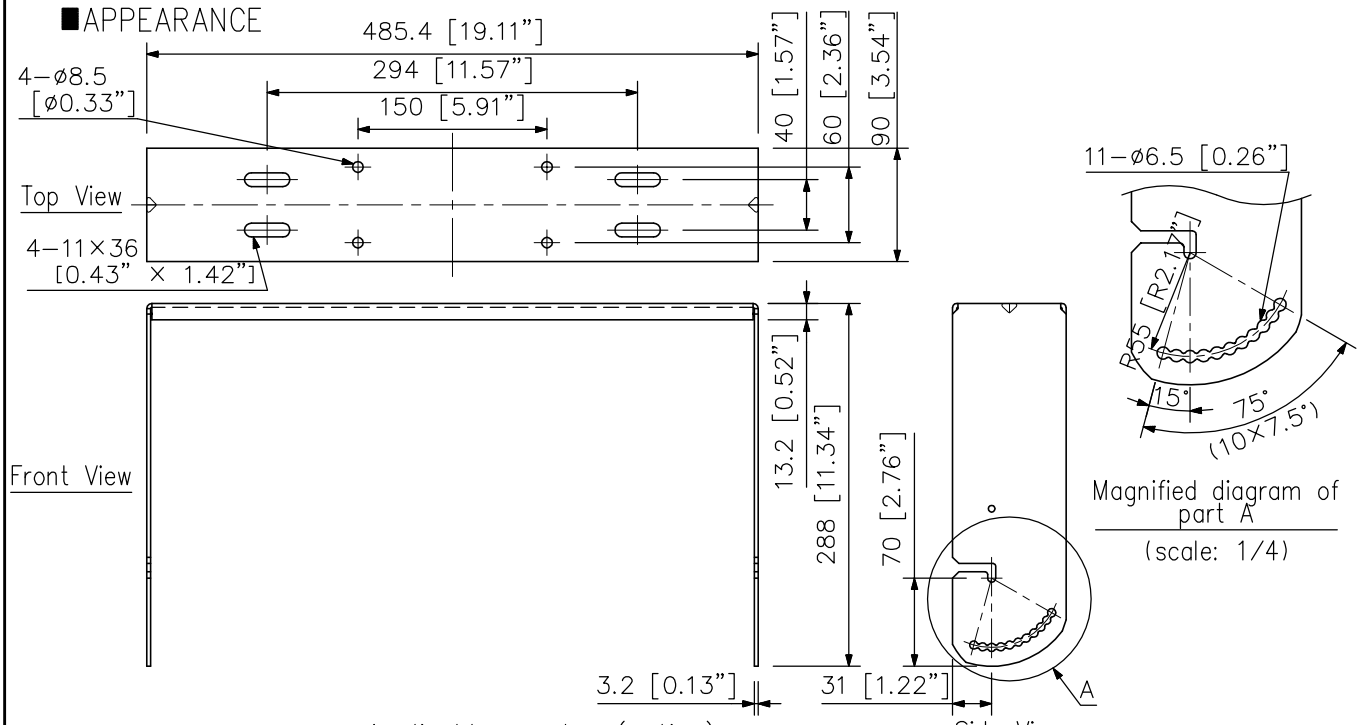

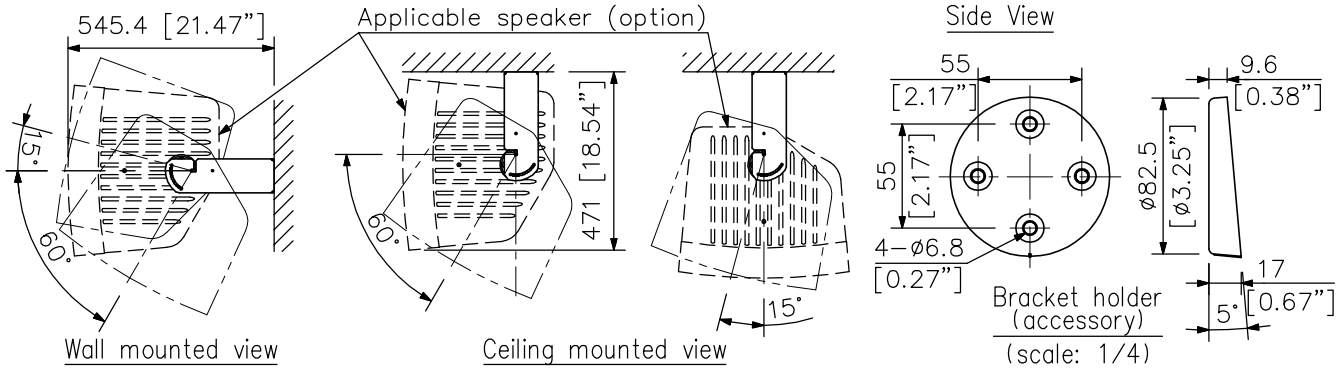

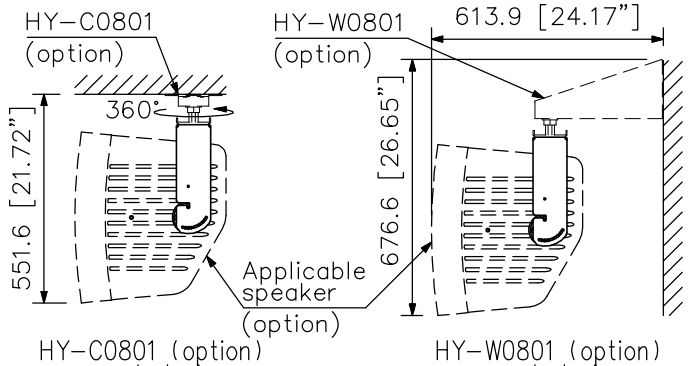

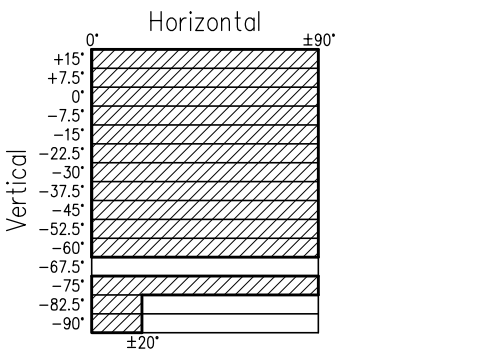

UNIT: mm SCALE: 1/6

Dovoz, distribuce a prodej v ČR:
AUDIO DIGITAL s.r.o.
www.audiodigital.cz