CS-154BS
Wide Range Speaker 15W EN/ISO/BS

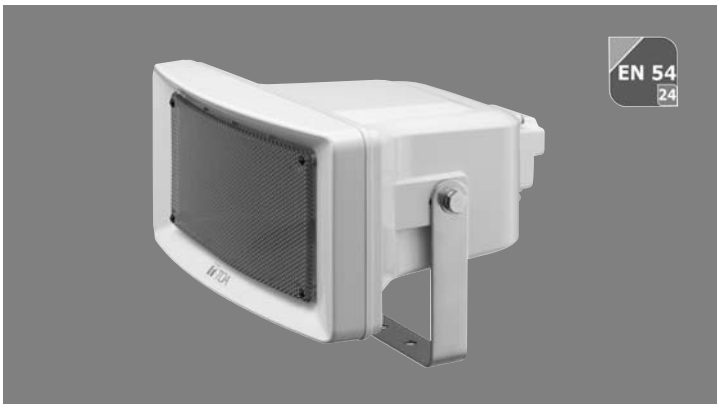

APPEARANCE AND DIMENSIONAL DIAGRAM

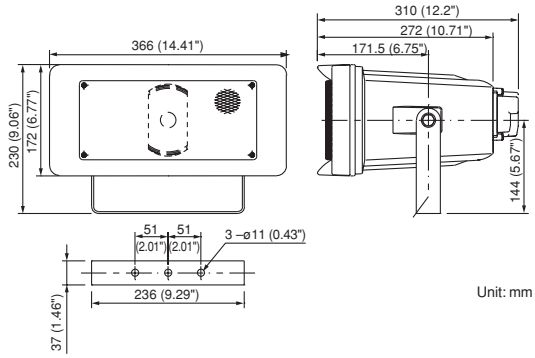

DESCRIPTION

The outdoor-use CS-154BS incorporates a wide-range horn, making it ideal for background music or paging announcements with high-quality sound. The use of a horn in combination with a cone speaker increases acoustic conversion efficiency, producing high output. A constant-directivity horn (90° horizontal) enables uniform and clear sound dispersion over a wide area. The CS-154BS has a resin enclosure that is lightweight, strong and resistant to impacts, as well as able to withstand outdoor installation weather conditions. Stainless-steel brackets and screws further protect against rust and corrosion. The speakers also comply with the IP65 Standard for dust- and waterproofing. Internal speaker parts feature a special weatherproofing treatment, while weatherproof polyurethane resin paint makes the enclosures extremely resistant to ultraviolet light. EN 54-24* and ISO 7240-24 certified, the CS-154BS is authorized for use in fire detection systems. It is also in compliance with BS 5839-8: 2008 14.8.

*EN 54-24: Loudspeaker for voice alarm systems for fire detection and fire alarm systems.

FEATURES

- Wide-range speaker for voice paging/alarm, background music and tone signalling
- Constant directivity horn for uniform and clear sound dispersion
- Polyurethane resin paint and stainless steel hardware offer excellent weatherproofing, and corrosion resistance.
- IP65 standard complied for dust tight and jet-water proof rating
- Lightweight and strong ABS resin enclosure that is impact-resistant
- Stainless steel mounting bracket for secure installation
- Ideal for schools, parking facilities, factories, parks, etc
- Certified to EN 54-24 and ISO 7240-24 (Certificate No.: 0359-CPD-0108)
- In compliance with BS 5839-8: 2008 14.8
- Ideally suited for voice alarm system application
- Input impedance selector with rotary switch

SPECIFICATIONS

Rated Noise Power:	15 W (100 V line and 70 V line)
Rated Impedance:	100 V line: 670 Ω (15 W), 1 kΩ (10 W), 2 kΩ (5 W) 70 V line: 330 Ω (15 W), 670 Ω (7.5 W), 1 kΩ (5 W), 2 kΩ (2.5 W)
Sensitivity:	97 dB (1 W, 1 m) (330 – 3,300 Hz, pink noise) 94 dB (1 W, 1 m) (100 – 10,000 Hz, pink noise) 82 dB (1 W, 4 m) (100 – 10,000 Hz, pink noise)
Maximum Sound Pressure Level:	104 dB (1.5 W, 1 m) (100 – 10,000 Hz, pink noise) 92 dB (1.5 W, 4 m) (100 – 10,000 Hz, pink noise)
Frequency Response:	150– 15,000 Hz
Coverage Angle:	Horizontal: 140° (500 Hz), 90° (1,000 Hz), 90° (2,000 Hz), 100° (4,000 Hz) Vertical: 200° (500 Hz), 155° (1,000 Hz), 90° (2,000 Hz), 60° (4,000 Hz)
Environmental Type:	B (outdoor applications)
Speaker Component:	12 cm (5") cone-type (treated for splash proof)
Operating Temperature:	-20° C to +55° C (-4° F to 131° F)
Dust/Water Protection:	IP65
Speaker Mounting Method:	Wall-mount
Cable Gland:	Size: PG 13.5 One cable gland is factory-installed, For bridge connection, one cable gland can be added*
Applicable Cable Size:	Outer diameter: ø 8 – 12.5 mm Conductor: Solid wire or 7-core wire No bridge connection: 0.8 – 10 mm² (AWG 18 – AWG 7) for solid wire 0.8 – 8 mm² (AWG 18 – AWG 8) for 7-core wire Bridge connection: 0.8 – 2.5 mm² (AWG 18 – AWG 13) for solid wire 0.8 – 1.5 mm² (AWG 18 – AWG 15) for 7-core wire
Cable Connection:	Screw terminal (steatite), can be bridge-connected
Finish:	Horn, Cover and Terminal cover: ABS resin, off-white, paint Bracket: Stainless steel Net: Aluminium, gray, paint Screw: Stainless steel
Dimensions:	366 (W) × 230 (H) × 310 (D) mm (14.41" × 9.06" × 12.2")
Weight:	3.0 kg (6.61 lb)
Accessory:	Terminal cover × 1

* Part code for Cable gland: 525-52-011-70 Cable gland AVC PGB13.5-12 (GRY)

Note: Never connect the 330 Ω position to the 100 V line.

Do not install the speaker face-up from a horizontal plane nor in such a way that the paper cone is exposed to direct sunlight.
If water accumulates on the paper cone, or ultraviolet rays are radiated on it, this may cause the paper cone to deteriorate, leading to speaker malfunction.

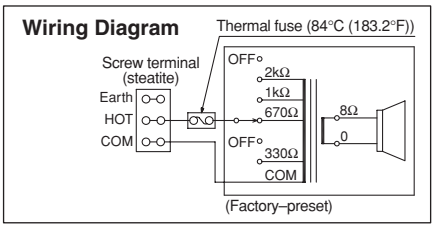

TOA

CHARACTERISTIC DIAGRAMS based on EN 54-24 measurement conditions (Pink noise, 1 W, 4 m)

Polar Response (Horizontal)

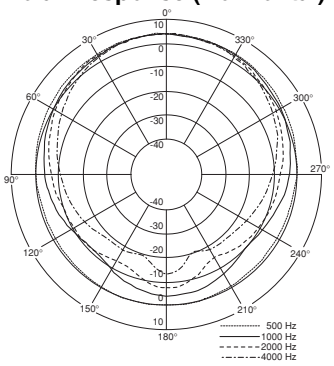

Polar Response (Vertical)

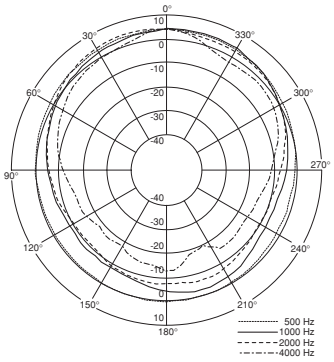

SPL vs. Frequency

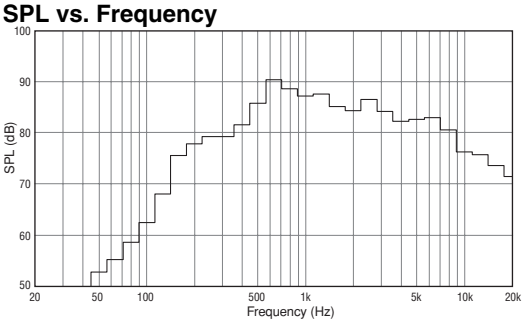

Beamwidth vs. Frequency

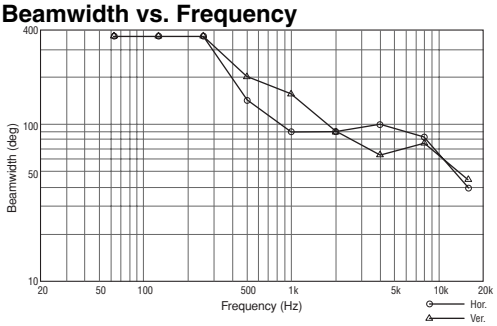

Directivity Factor vs. Frequency

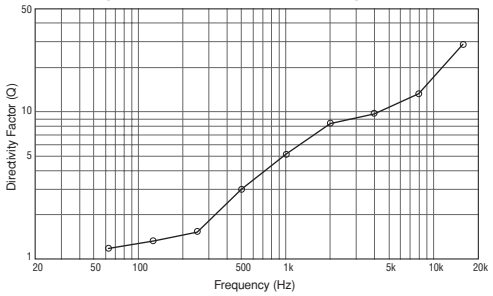

ARCHITECTURAL AND ENGINEERING SPECIFICATIONS

The speaker shall be a wide-range weatherproof horn speaker suitable for paging, background music and voice evacuation for both indoor and outdoor applications. The speaker component shall be a 12 cm (4.72") cone-type speaker, treated for weather-resistance. The speaker shall have an IEC 60529 / EN 60529 dust tight and jet-water proof rating of IP65.

Rated input shall be 15 W. Input impedance shall be easily adjustable with rotary switch on the rear side of the speaker. The speaker shall include a transformer having multiple taps (5 W, 10 W, 15 W at 100 V and 2.5 W, 5 W, 7.5 W, 15 W at 70 V) adjustable. The sensitivity at a distance of 1 m with a 1 W input level applied shall be 97 dB. The speaker shall have a frequency response of 150 – 15,000 Hz. Horizontal and vertical dispersion at –6 dB below the on-axis reference at 1 kHz shall be 90° (H) × 155° (V). The speaker shall have an operating temperature of -20° C to +55° C. The speaker enclosure shall be constructed of ABS resin and coated with polyurethane resin paint to resist long-term exposure to ultraviolet light. The grille shall be constructed of protective aluminium net to prevent damage, grey paint. All mounting hardware, including screws and bolts, shall be stainless steel, which protects the speaker from corrosion. Dimensions shall be 366 (W) × 230 (H) × 310 (D) mm (14.41” × 9.06” × 12.2”). Weight shall be 3.0 kg (6.61 lb.). A fire-resistant steatite screw terminal block with thermal fuse allows secure cable connections and bridge wiring. Internal cables shall be flame-resistant insulation. Fire Rated Cable can be directly connected to the speaker cabinet via PG13.5 (or 20 mm) cable gland.

The speaker shall be certified according to EN 54-24 with CPD Number 0359-CPD-0108, certified according to ISO 7240-24 and in compliance with the British Standard BS 5839-8

The speaker shall be a TOA model CS-154BS

TOA Corporation
www.toa.jp

Specifications are subject to change without notice.
(1108) 833-52-423-4A u

Dovoz, distribuce a prodej v ČR:
AUDIO DIGITAL s.r.o.
www.audiodigital.cz